NETFLOOR®

Service Box SS603

SS603 floor box consists of stainless steel mounting lid and galvanized steel base, with 2 compartments, for finish floor height 60 mm.

The systems

Sockets: 2 sockets for 2 plugs. 15A, 125 V
1 component for total 3 data/voice jack
overall dimension: 155 mm X 248 mm
Height: 60 mm (access floor minimum finish height)
Mounting lid: stainless steel
Box base: size 90 mm X 300 mm
Box base and compartments for sockets and data jack: made of galvanized steel by powder coating.

SS603 dimensions details

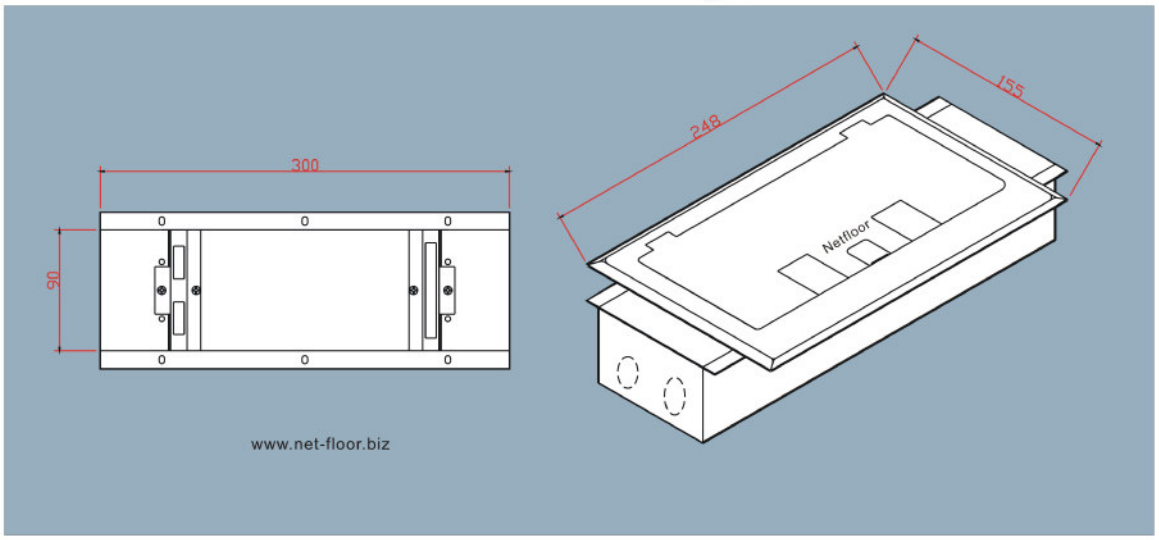

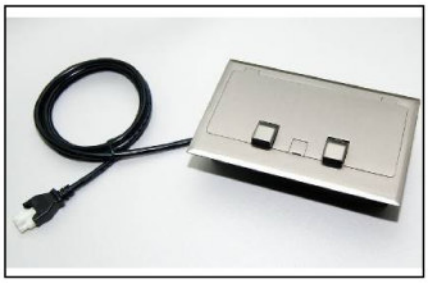

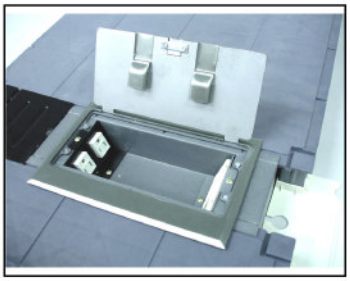

Plug type

USA Japan Taiwan

- Compatible with ZoneEx.
- Quick install.
- Install in ECO Series trench.
- Do not need cut panel.